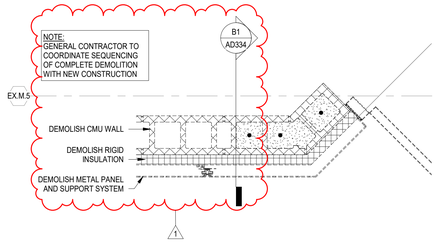

D3 AD601 **PLAN DETAIL - DEMOLITION**
1" = 1'-0"

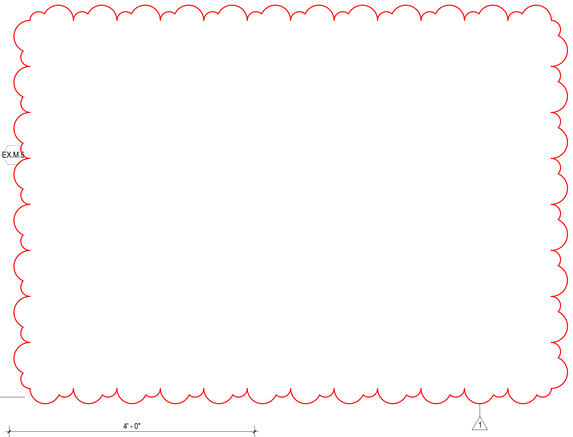

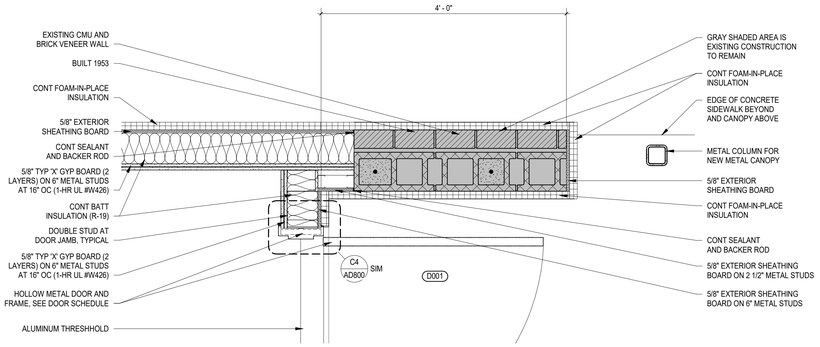

C2 AD601 **PLAN DETAIL - NEW CONSTRUCTION**
1" = 1'-0"

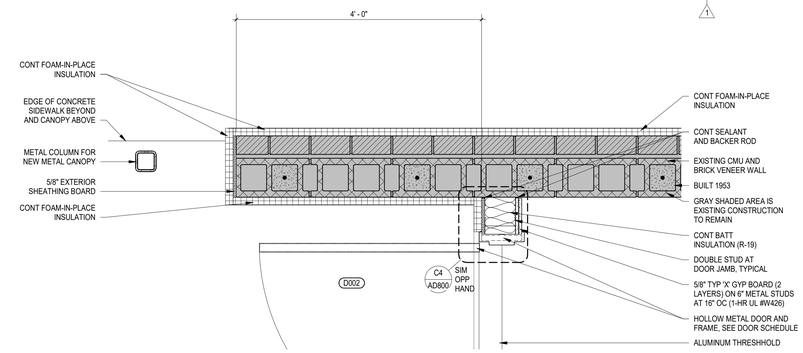

C3 AD601 **PLAN DETAIL - NEW CONSTRUCTION**
1" = 1'-0"

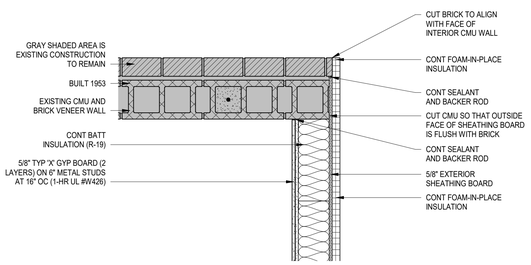

B3 AD601 **PLAN DETAIL - NEW CONSTRUCTION**
1" = 1'-0"

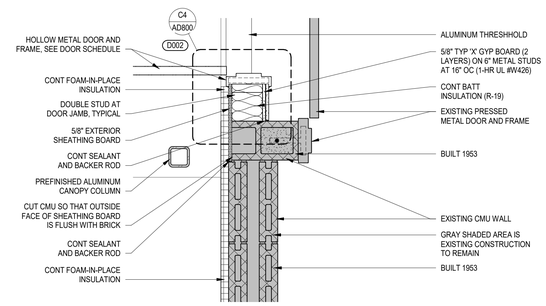

B4 AD601 **PLAN DETAIL - NEW CONSTRUCTION**
1" = 1'-0"

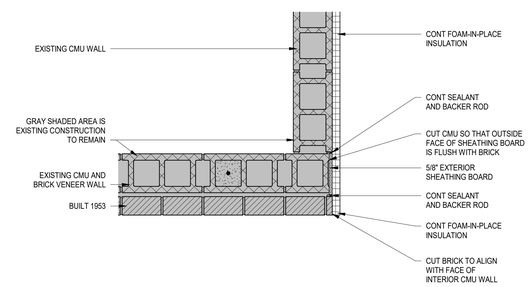

A3 AD601 **PLAN DETAIL - NEW CONSTRUCTION**
1" = 1'-0"

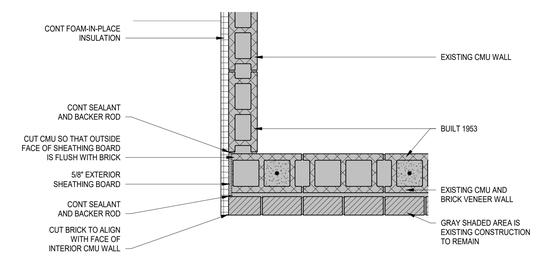

A4 AD601 **PLAN DETAIL - NEW CONSTRUCTION**
1" = 1'-0"

ALL DRAWINGS, SPECIFICATIONS AND COPIES THEREOF FURNISHED BY MCMILLAN PAZDAN SMITH ARCHITECTURE ARE AND SHALL REMAIN THE PROPERTY OF MCMILLAN PAZDAN SMITH ARCHITECTURE. THESE MATERIALS ARE TO BE USED ONLY IN CONNECTION WITH THIS PROJECT AND NOT TO BE REPRODUCED OR DISTRIBUTED TO THIRD PARTIES WITHOUT THE EXCEPTION OF ONE CONTRACT SET FOR EACH PARTY TO THE CONTRACT. SUCH DOCUMENTS ARE TO BE RETURNED OR SUITABLY ACCOUNTED FOR TO MCMILLAN PAZDAN SMITH ARCHITECTURE UPON COMPLETION OF THE PROJECT. SUBMISSION OR DISTRIBUTION TO MEET OFFICIAL REGULATORY REQUIREMENTS OR OTHER PURPOSES IN CONNECTION WITH THE PROJECT IS NOT TO BE CONSTRUED AS PUBLICATION IN DEROGATION OF MCMILLAN PAZDAN SMITH'S COMMON LAW COPYRIGHT OR OTHER RESERVED RIGHTS. COPYRIGHT 2019 MCMILLAN PAZDAN SMITH.
ALL RIGHTS RESERVED

4/29/2022 2:22:39 PM 6900 NE ISSAQUAH ST, Bremerton, Washington, United States

mcmillan pazdan smith
ARCHITECTURE

CONSULTANT LOGO

SEALS

SPARTANBURG SCHOOL DISTRICT FIVE

JAMES F. BYRNES HIGH SCHOOL
PHASE 2 DEMOLITION

150 E. MAIN STREET
DUNCAN, SC 29334

SHEET ISSUE:

NO.	DATE	DESCRIPTION	BY
0	04/22/22	IFC DEMOLITION	MLC
1	04/29/22	DEMO REVISIONS	MLC

PRINCIPAL IN CHARGE: MLC
PROJECT ARCHITECT: RPC
DRAWN BY: PS

SHEET TITLE:

PHASE 2 DEMOLITION - PLAN DETAILS

SHEET NO. AD601

PROJ. NO. 020420.00