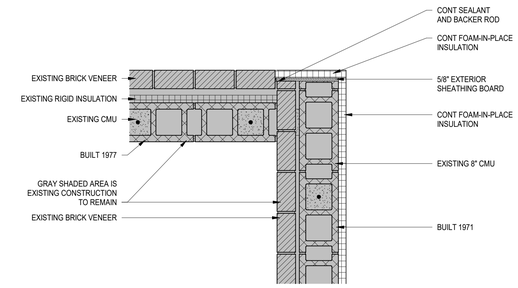


D2 AD600 **PLAN DETAIL - NEW CONSTRUCTION**
1" = 1'-0"

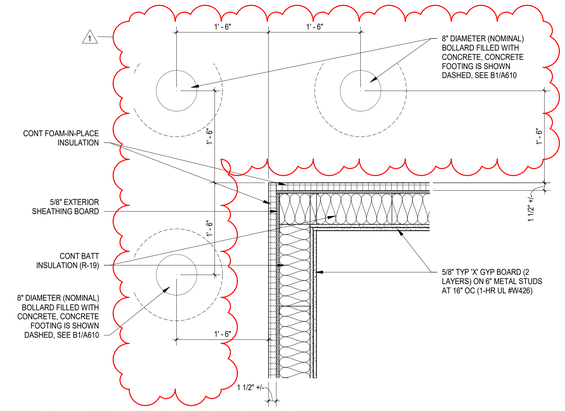


D3 AD600 **PLAN DETAIL - NEW CONSTRUCTION**
1" = 1'-0"

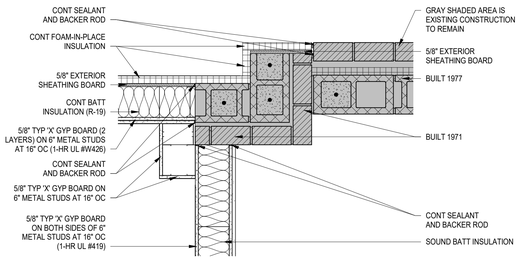


D4 AD600 **PLAN DETAIL - NEW CONSTRUCTION**
1" = 1'-0"

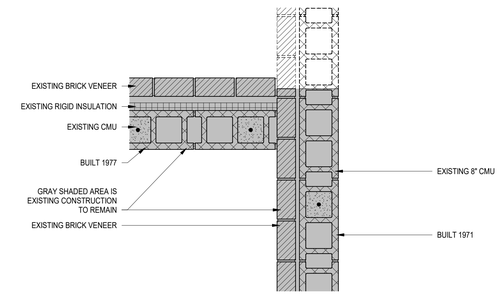


C2 AD600 **PLAN DETAIL - DEMOLITION**
1" = 1'-0"

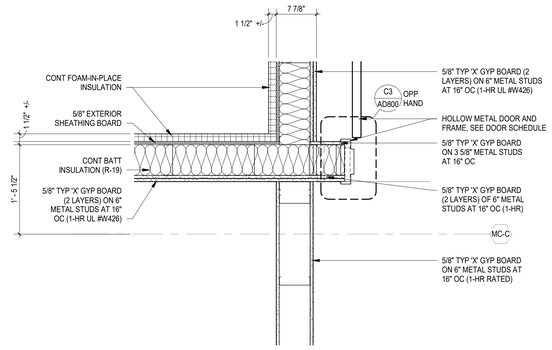


C3 AD600 **PLAN DETAIL - NEW CONSTRUCTION**
1" = 1'-0"

NOTE:
1. COORDINATE EXTENT OF DEMOLITION WITH NEW CONSTRUCTION DETAIL D4/AD-600 AND EXISTING CONSTRUCTION

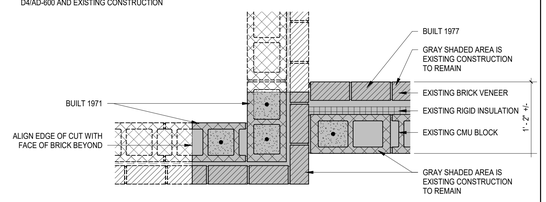


C4 AD600 **PLAN DETAIL - DEMOLITION**
1" = 1'-0"

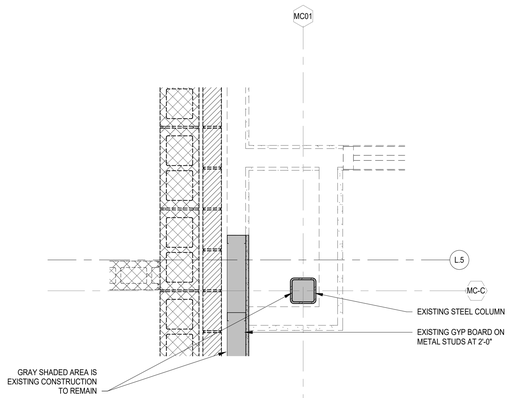


B1 AD600 **PLAN DETAIL - DEMOLITION**
1" = 1'-0"

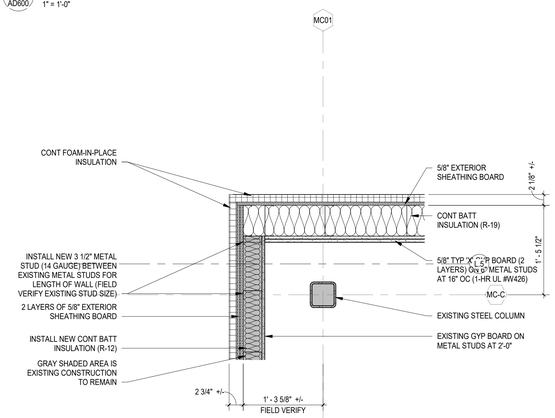


B2 AD600 **PLAN DETAIL - NEW CONSTRUCTION**
1" = 1'-0"

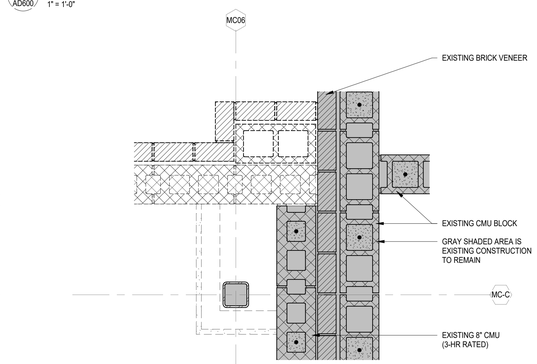


B3 AD600 **PLAN DETAIL - DEMOLITION**
1" = 1'-0"

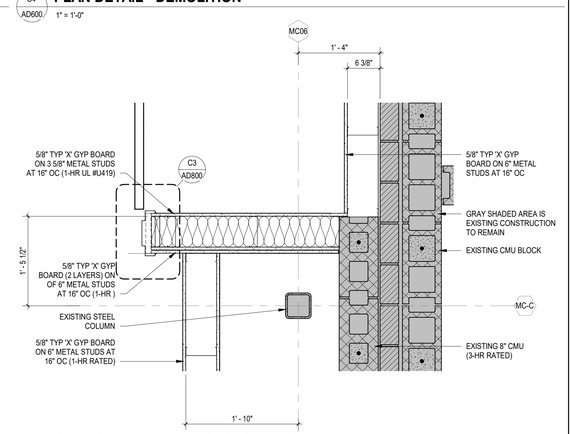


B4 AD600 **PLAN DETAIL - NEW CONSTRUCTION**
1" = 1'-0"

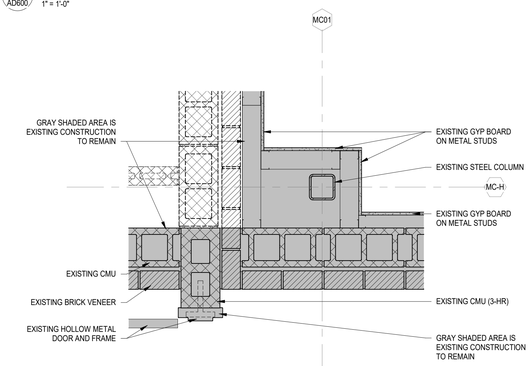


A1 AD600 **PLAN DETAIL - DEMOLITION**
1" = 1'-0"

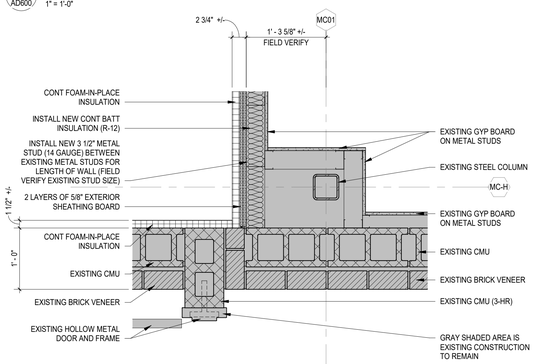


A2 AD600 **PLAN DETAIL - NEW CONSTRUCTION**
1" = 1'-0"

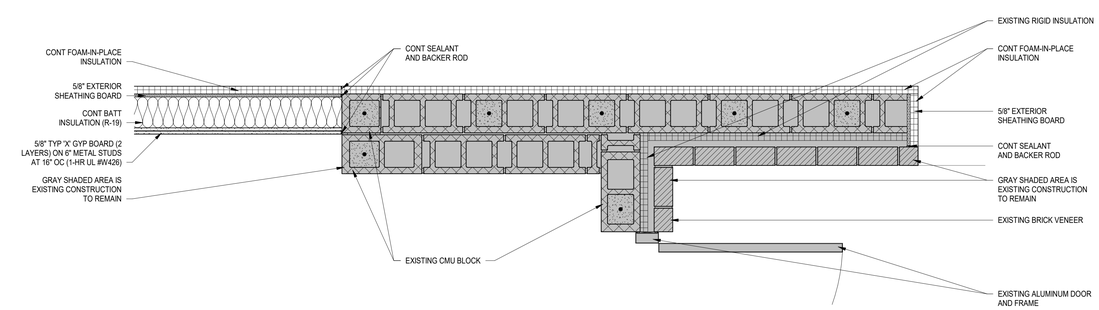


A3 AD600 **PLAN DETAIL - NEW CONSTRUCTION**
1" = 1'-0"

ALL DRAWINGS, SPECIFICATIONS AND COPIES THEREOF FURNISHED BY MCMILLAN PAZDAN SMITH ARCHITECTURE ARE AND SHALL REMAIN THE PROPERTY OF MCMILLAN PAZDAN SMITH ARCHITECTURE. THEIRS MAY NOT BE USED ON OTHER PROJECTS OR EXTENSIONS OF THIS PROJECT EXCEPT BY AGREEMENT IN WRITING BY MCMILLAN PAZDAN SMITH ARCHITECTURE. THESE MATERIALS ARE TO BE USED ONLY WITH RESPECT TO THIS PROJECT AND NOT TO BE REPRODUCED OR PUBLISHED IN CONDITIONS OF SIMILAR PLAN WITH COPYRIGHT OR OTHER RESERVED RIGHTS. COPYRIGHT 2019 MCMILLAN PAZDAN SMITH. ALL RIGHTS RESERVED

mcmillan pazdan smith
ARCHITECTURE

CONSULTANT LOGO

SEALS

SPARTANBURG SCHOOL DISTRICT FIVE

JAMES F. BYRNES HIGH SCHOOL
PHASE 2 DEMOLITION

150 E. MAIN STREET
DUNCAN, SC 29334

SHEET ISSUE:

| NO. | DATE | DESCRIPTION | BY |
|---|---|---|---|
| 0 | 04/22/22 | IFC DEMOLITION | MLC |
| 1 | 04/29/22 | DEMO REVISIONS | MLC |

PRINCIPAL IN CHARGE: MLC
PROJECT ARCHITECT: RPC
DRAWN BY: PS

SHEET TITLE:
PHASE 2 DEMOLITION - PLAN DETAILS

SHEET NO. AD600

PROJ. NO. 020420.00