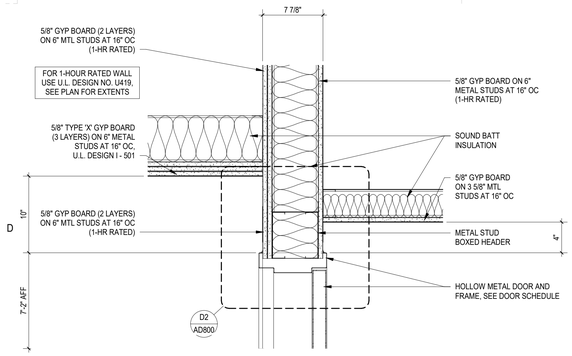

D1 AD800 **DOOR HEAD DETAIL**
1 1/2" = 1'-0"

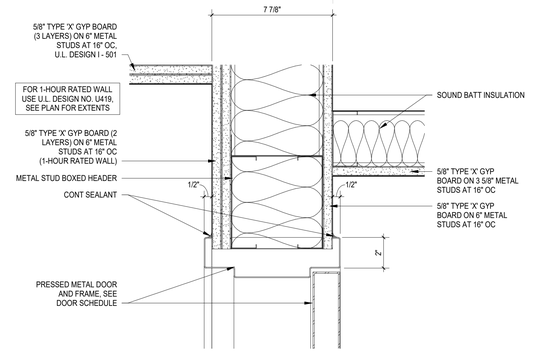

D2 AD800 **DOOR HEAD DETAIL**
3" = 1'-0"

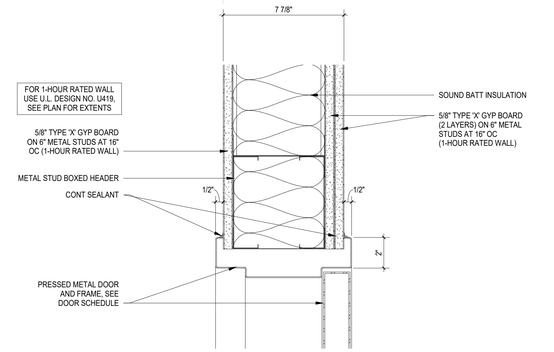

D3 AD800 **DOOR HEAD DETAIL**
3" = 1'-0"

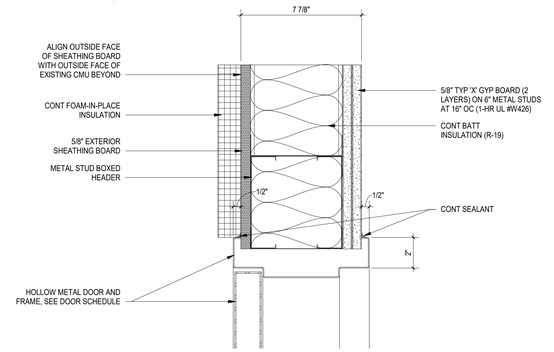

D4 AD800 **DOOR HEAD DETAIL**
3" = 1'-0"

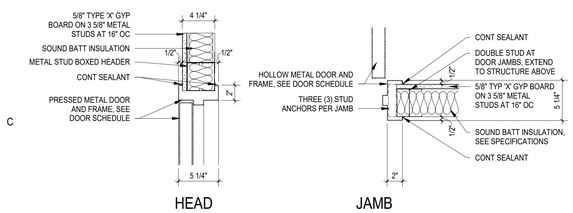

C1 AD800 **DOOR HEAD AND JAMB DETAIL**
1 1/2" = 1'-0"

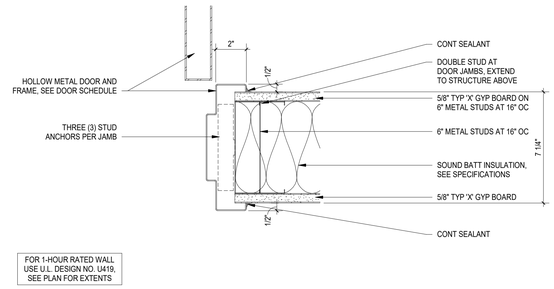

C2 AD800 **DOOR JAMB DETAIL**
3" = 1'-0"

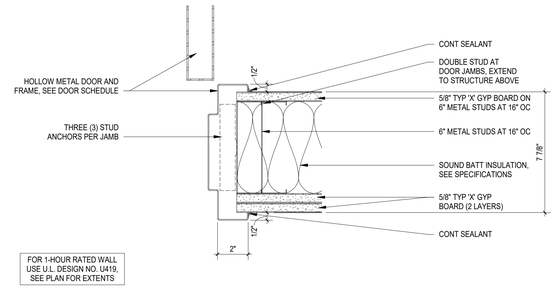

C3 AD800 **DOOR JAMB DETAIL**
3" = 1'-0"

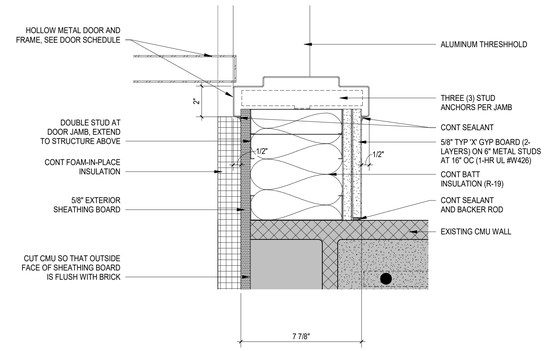

C4 AD800 **DOOR JAMB DETAIL**
3" = 1'-0"

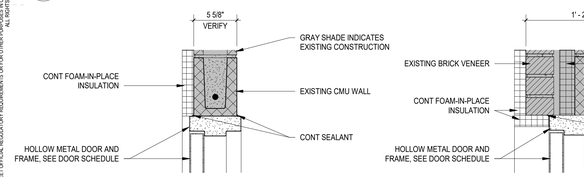

H-1 H-2

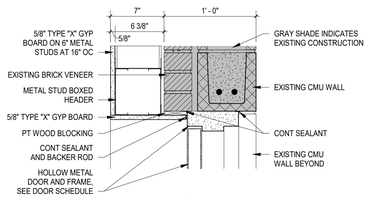

H-3

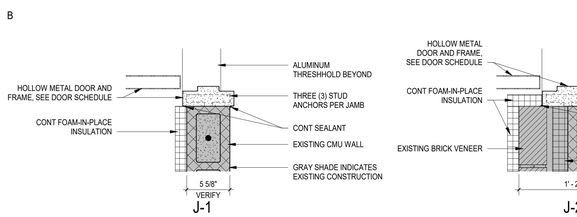

J-1 J-2

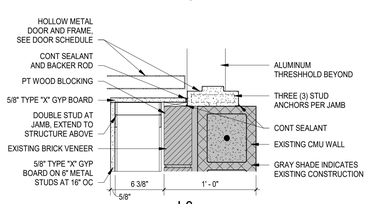

J-3

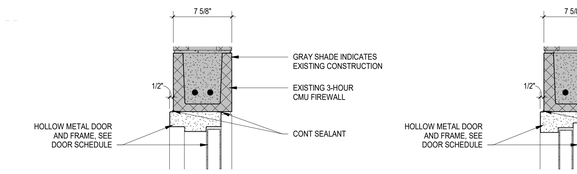

H-4 H-5

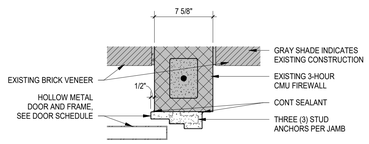

J-7

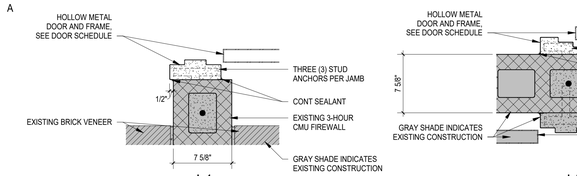

J-4 J-5

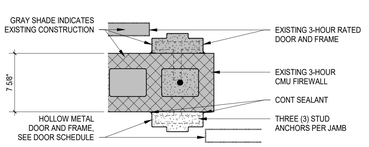

J-6

A1 AD800 **DOOR DETAILS**
1 1/2" = 1'-0"

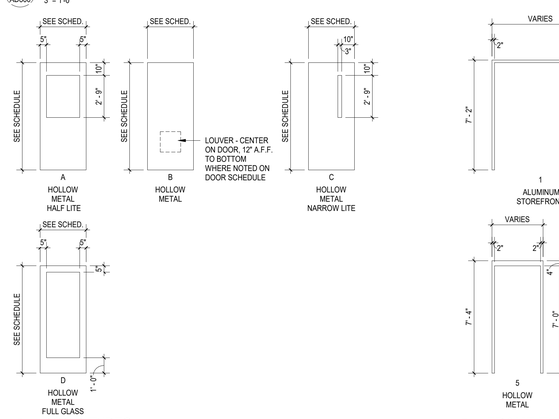

B3 AD800 **DOOR TYPES**
1/4" = 1'-0"

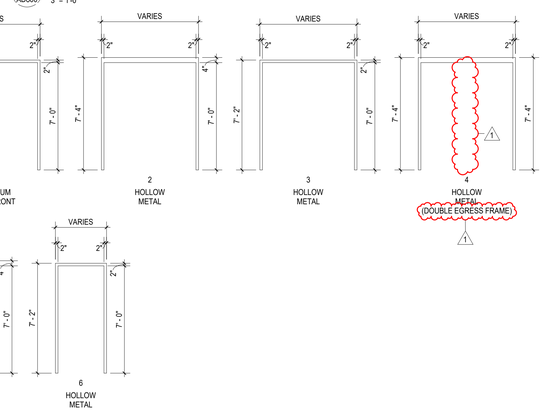

B4 AD800 **FRAME TYPES**
1/4" = 1'-0"

PHASE 2 DEMOLITION - DOOR SCHEDULE

		DOOR							FRAME		DETAILS		
DOOR NO.	ROOM NO.	WIDTH	HEIGHT	THK.	TYPE	RATING	MATERIAL	HARDWARE TYPE	TYPE	MATERIAL	HEAD	JAMB	REMARKS
D001	E-200A	7' - 0"	7' - 0"	0' - 1 3/4"	A		HM		3	HM	D4/AD-800 OPP HAND	C4/AD-800 OPP HAND	1, 6, 7, 9, 10
D002	E-200B	7' - 0"	7' - 0"	0' - 1 3/4"	A		HM		3	HM	D4/AD-800	C4/AD-800	1, 6, 7, 9, 10
D003	203A	2' - 6"	7' - 0"	0' - 1 3/4"	C		HM		3	HM			EXISTING DOOR TO REMAIN 1
D004	E-261	6' - 0"	7' - 0"	0' - 1 3/4"	C	45 MIN	HM		3	HM	D2/AD-800	C2/AD-800	1, 4, 6, 7, 9
D005	E-200E	6' - 0"	7' - 0"	0' - 1 3/4"	C	45 MIN	HM		3	HM	D3/AD-800	C3/AD-800	1, 6, 7, 9
D006	217	6' - 0"	7' - 0"	0' - 1 3/4"	B	45 MIN	HM		2	HM	H-3	J-3	1, 3, 6, 9
D007	E-200E	6' - 0"	7' - 0"	0' - 1 3/4"	B	45 MIN	HM		2	HM	H-2	J-2	1, 3, 6, 7, 9
D008	1117	6' - 0"	7' - 0"	0' - 1 3/4"	B	3-HR	HM		2	HM	H-4	J-4 & J-6	1, 3, 5, 7, 8, 9
D009	1117	6' - 0"	7' - 0"	0' - 1 3/4"	B	3-HR	HM		4	HM	H-5	J-5 & J-7	1, 2, 3, 5, 7, 9
D010	G101	3' - 0"	7' - 0"	0' - 1 3/4"	B		HM		6	HM	C1/AD-800	C1/AD-800	

REMARKS KEYNOTES:
1 PAIR OF DOORS
2 DOUBLE EGRESS DOORS
3 INSTALL IN AN EXISTING OPENING, VERIFY DIMENSIONS
4 NOT LOCKABLE
5 PROVIDE MAGNETIC HOLD OPEN DEVICES AT EACH DOOR
6 PROVIDE ALUMINUM THRESHHOLD
7 PROVIDE PANIC HARDWARE
8 REINSTALL SALVAGED DOOR
9 90 DEGREE DOOR CLOSER
10 FLOOR MOUNTED DOOR STOP AT EACH DOOR

ALL DRAWINGS, SPECIFICATIONS AND CORES THEREOF FURNISHED BY MCMILLAN PAZDAN SMITH ARCHITECTURE ARE AND SHALL REMAIN THE PROPERTY OF MCMILLAN PAZDAN SMITH ARCHITECTURE. THESE MATERIALS ARE TO BE USED ONLY WITH THE EXCEPTION OF THE CONTRACT SET FOR EACH PARTY TO THE CONTRACT. SUCH DOCUMENTS ARE TO BE RETURNED OR SUITABLY ACCOUNTED FOR TO MCMILLAN PAZDAN SMITH ARCHITECTURE UPON COMPLETION OF THE PROJECT. SUBMISSION OR DISTRIBUTION TO MEET OFFICIAL REGULATORY REQUIREMENTS OR OTHER PURPOSES IN CONNECTION WITH THE PROJECT IS NOT TO BE CONSTRUED AS PUBLICATION IN DEROGATION OF MCMILLAN PAZDAN SMITH'S COMMON LAW COPYRIGHT OR OTHER RESERVED RIGHTS. COPYRIGHT 2019 MCMILLAN PAZDAN SMITH ALL RIGHTS RESERVED

mcmillan pazdan smith
ARCHITECTURE
CONSULTANT LOGO
SEALS

SPARTANBURG SCHOOL DISTRICT FIVE
JAMES F. BYRNES HIGH SCHOOL
PHASE 2 DEMOLITION
150 E. MAIN STREET
DUNCAN, SC 29334

SHEET ISSUE:

NO.	DATE	DESCRIPTION	BY
0	04/22/22	IFC DEMOLITION	MLC
1	04/29/22	DEMO REVISIONS	MLC

PRINCIPAL IN CHARGE: MLC
PROJECT ARCHITECT: RPC
DRAWN BY: PS

SHEET TITLE:
PHASE 2 DEMOLITION - DOOR SCHEDULE, TYPES AND DETAILS

SHEET NO. AD800
PROJ. NO. 020420.00